VarioChrom 250 Art-Nr. 50.654 / S / M / D

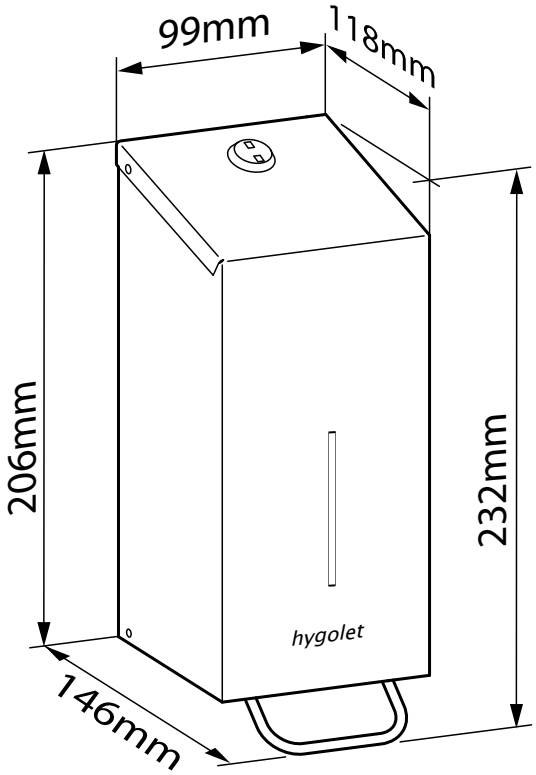

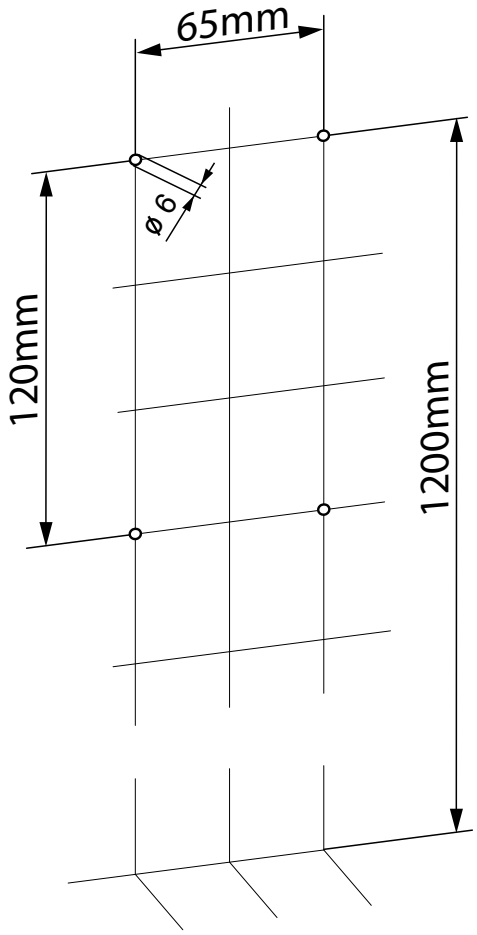

VarioChrom 600 Art-Nr. 50.653 / S / M / D

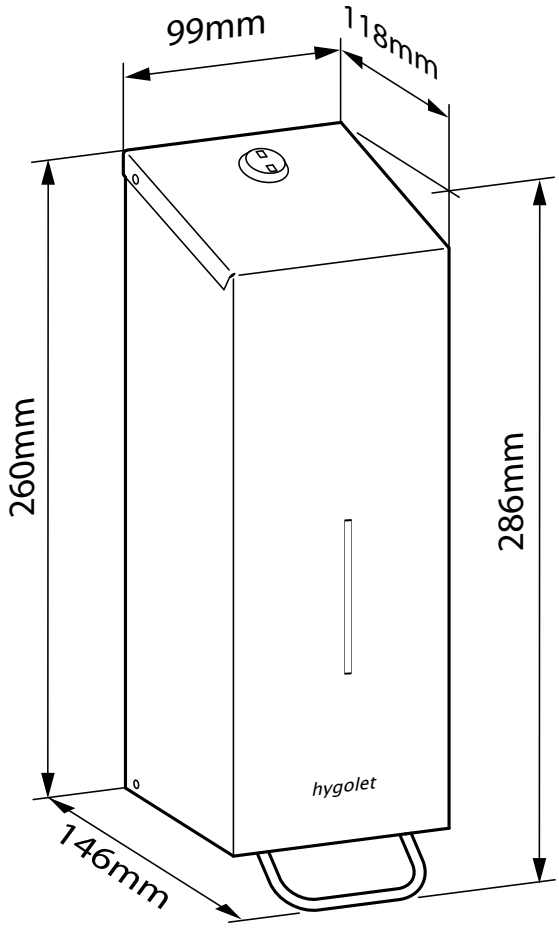

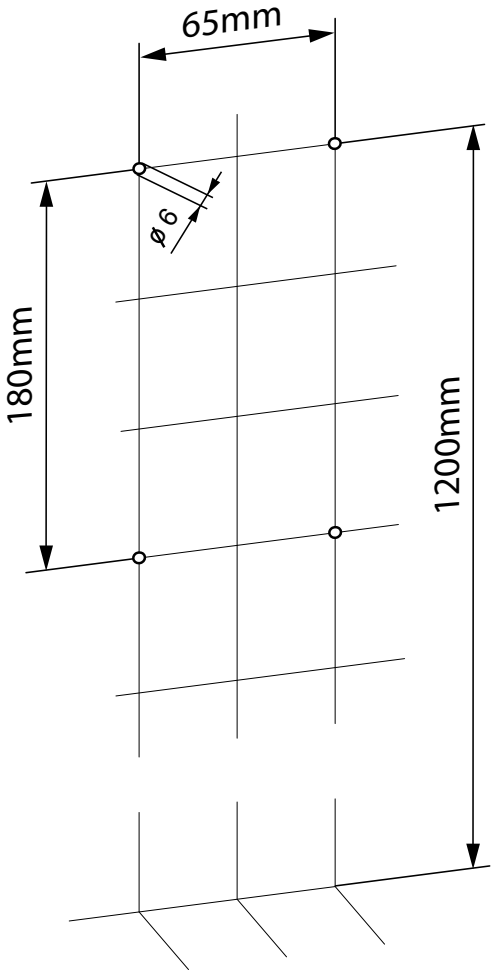
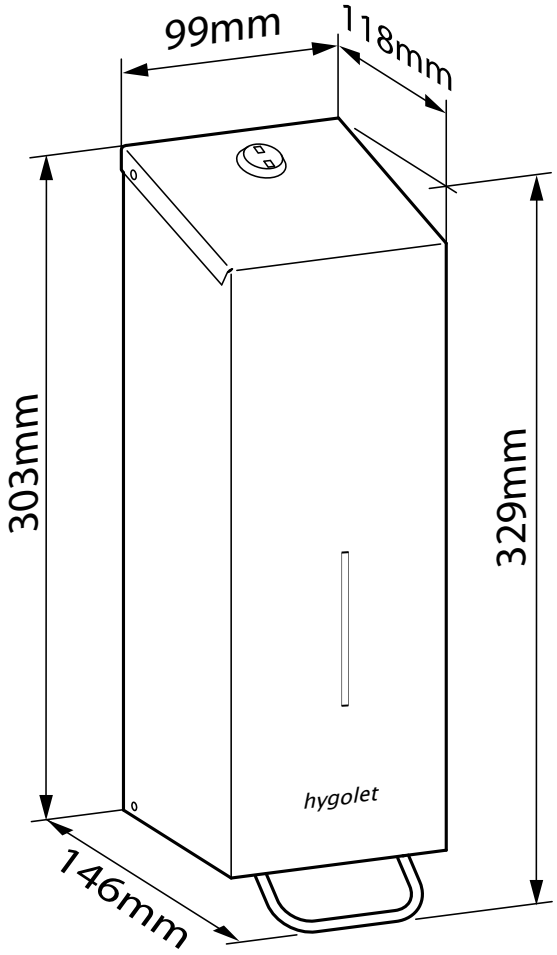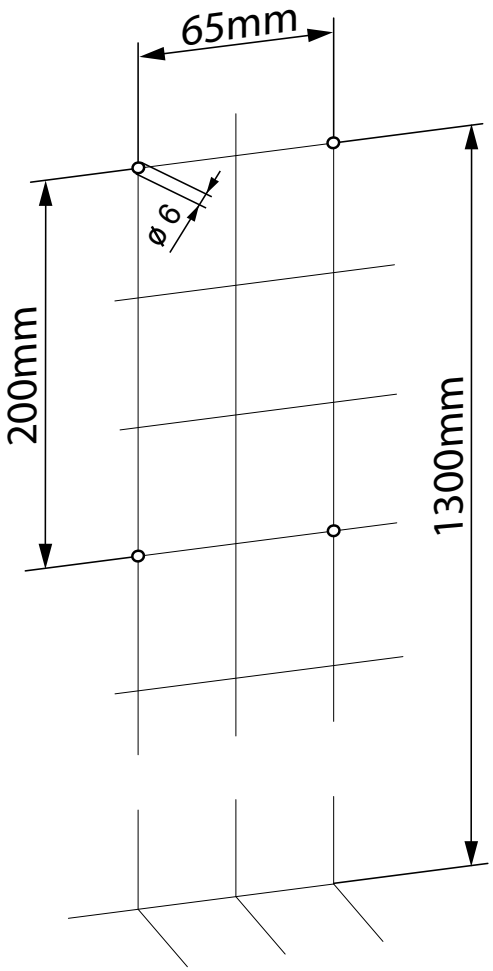
VarioChrom 1200 Art-Nr. 50.651 / S / M / D